ASHMORE

BubbleJET® Rail Shower

238200CP | Chrome
238200MB | Matte Black
238200BN | PVD Brushed Nickel
238200BB | PVD Brushed Brass
238200GM | PVD Gunmetal

WELS: 4 STAR | 7.5 L/min
WELS Registration No.: S18433

- 120mm Ø Dual Function Handset
- 20.6mm Ø Round Rail
- Rail adjustable to 750mm centres
- BubbleJET® Technology



BubbleJET®

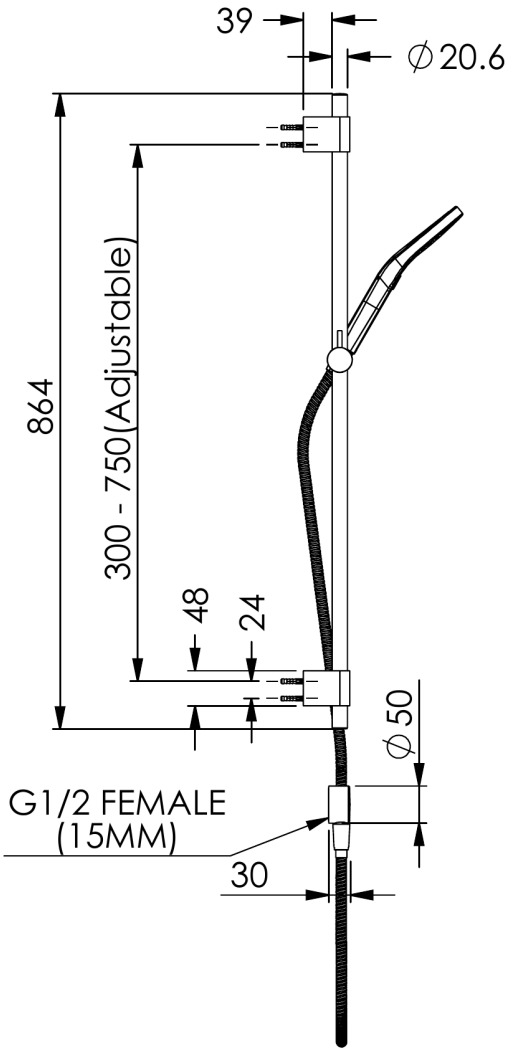

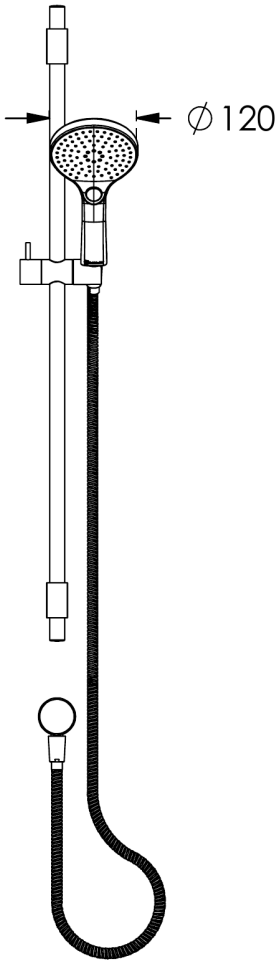

SSG-20260917-E2C28B95

AU PHONE 1800 244 487
EMAIL aussales@greenstapware.com
WEBSITE greenstapware.com.au

GREENS
where life meets water