ASHMORE

BubbleJET®
Overhead Drencher



9405588CP | Chrome
9405588MB | Matte Black
9405588BN | PVD Brushed Nickel
9405588BB | PVD Brushed Brass
9405588GM | PVD Gunmetal

WELS: 3 STAR | 9.0 L/min
WELS Registration No.: S18437

- 305mm Ø Drencher
- Arms sold separately
- BubbleJET® Technology

BubbleJET®

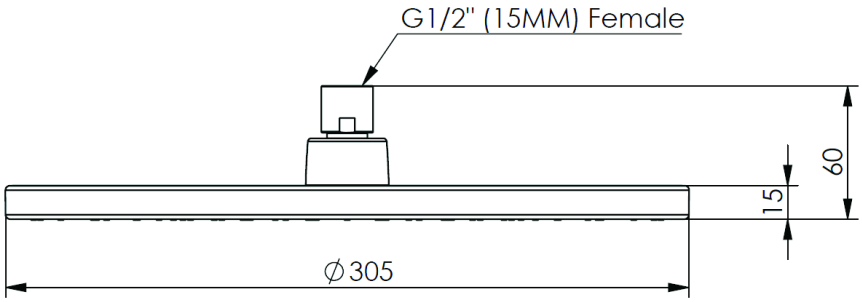

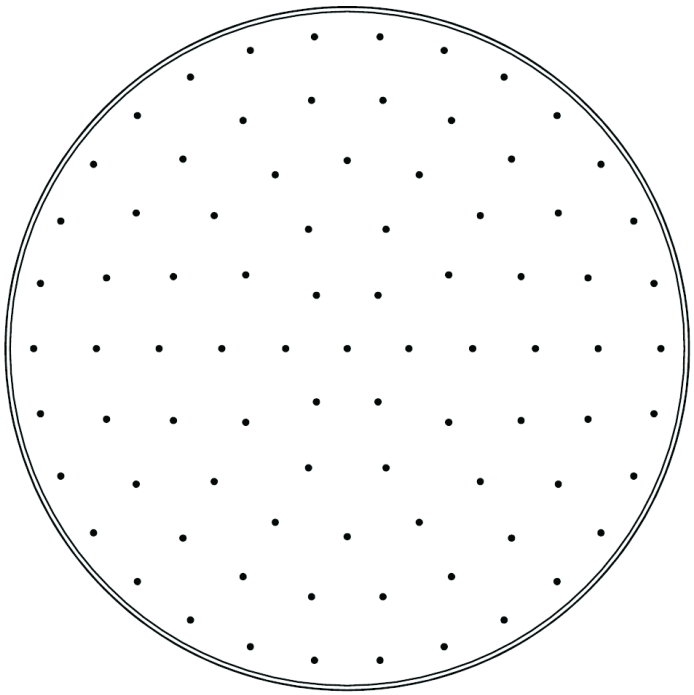

SSG-20260917-D1D2E861

AU PHONE 1800 244 487
EMAIL aussales@greenstapware.com
WEBSITE greenstapware.com.au

GREENS
where life meets water