CORBAN

Rail Shower

193000CP | Chrome
193000MB | Matte Black
193000BN | PVD Brushed Nickel
193000BB | PVD Brushed Brass
193000GM | PVD Gunmetal

WELS: 3 STAR | 9.0 L/min
WELS Registration No.: S14022

- 112mm Ø multi function handset
- 30mm wide rail



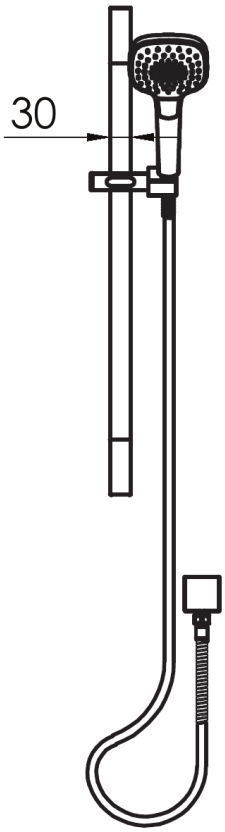

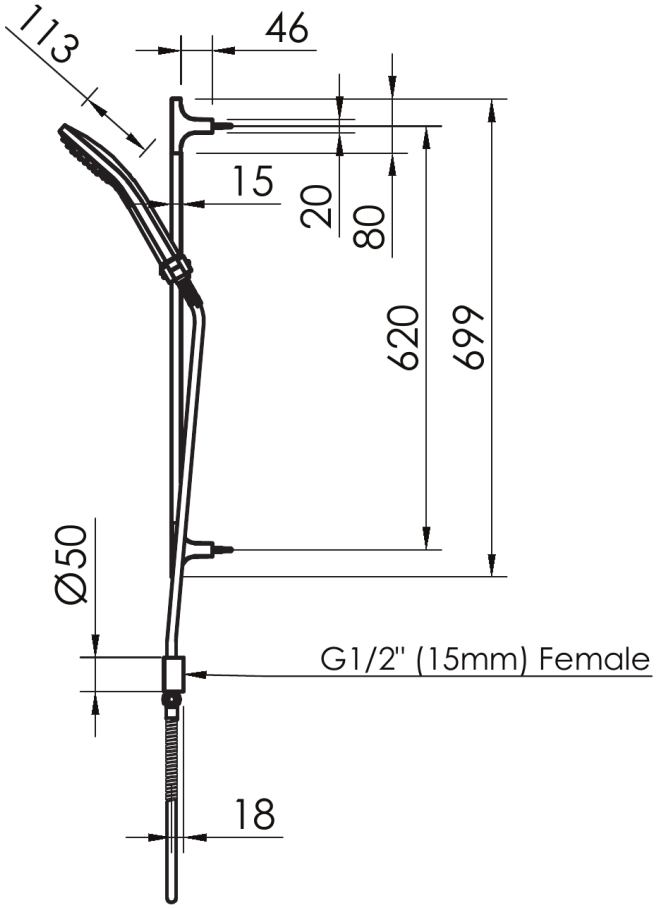

AU PHONE 1800 244 487
EMAIL aussales@greenstapware.com
WEBSITE greenstapware.com.au

GREENS
where life meets water