INSTALLATION INSTRUCTIONS

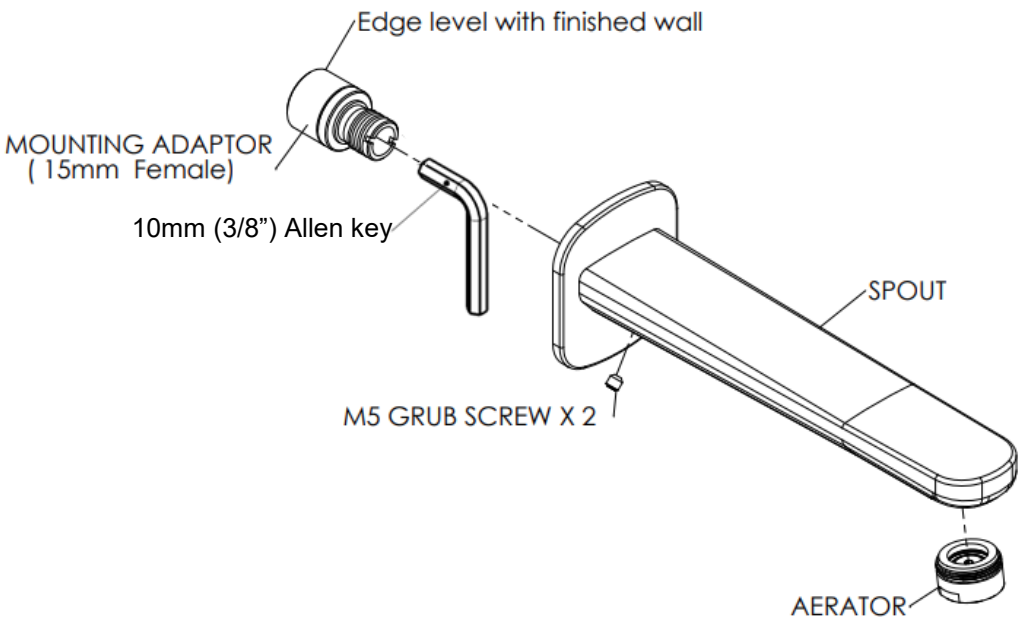

Install a brass 15mm male wingback elbow (not supplied).

1. Note: The female mounting adaptor requires 10mm thread from finished wall.

Install the female mounting adaptor.

1. Remove the 15mm female mounting adaptor by unscrewing the grub screws under the spout until nearly out.
    a. This is to ensure the O-ring on the adaptor is not cut.
2. Cut the inlet thread to 10mm from finished wall.
3. Install using 10mm (3/8”) Allen key.
    a. **Back edge of the adaptor to be level with the finished wall as shown**.

Install spout.

1. Grease the O-ring on adaptor.
2. Remove the protective tape from seal on the flange and position against the wall over adaptor.
3. Install spout to mounting adaptor and tighten the grub screws.
    a. **Check the grub screws are not protruding into the bore**, to ensure the O-ring on the adaptor is not cut.

GREENS

DAVENA WALL MOUNTED BATH SPOUT

INSTALLATION INSTRUCTIONS

PRODUCT #	**BATCH #**

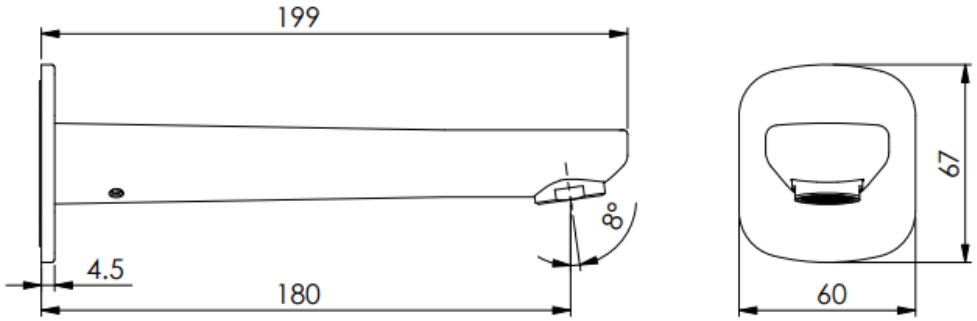

Installation shall be in accordance with the AS/NZS3500 series of standards.

Please leave this instruction sheet with the customer.

For full warranty terms and conditions, please visit www.greenstapware.com/warranty-and-care/

Distributed by: Greens Global AUS PTY LTD
36 Naxos Way, Keysborough VIC 3173
Phone: 1800 244 487 Fax: 1800 244 212
Email: aussales@greenstapware.com
Website: www.greenstapware.com
Service Hotline: 1800 244 992

#42251 12/24

INSTALLATION INSTRUCTIONS

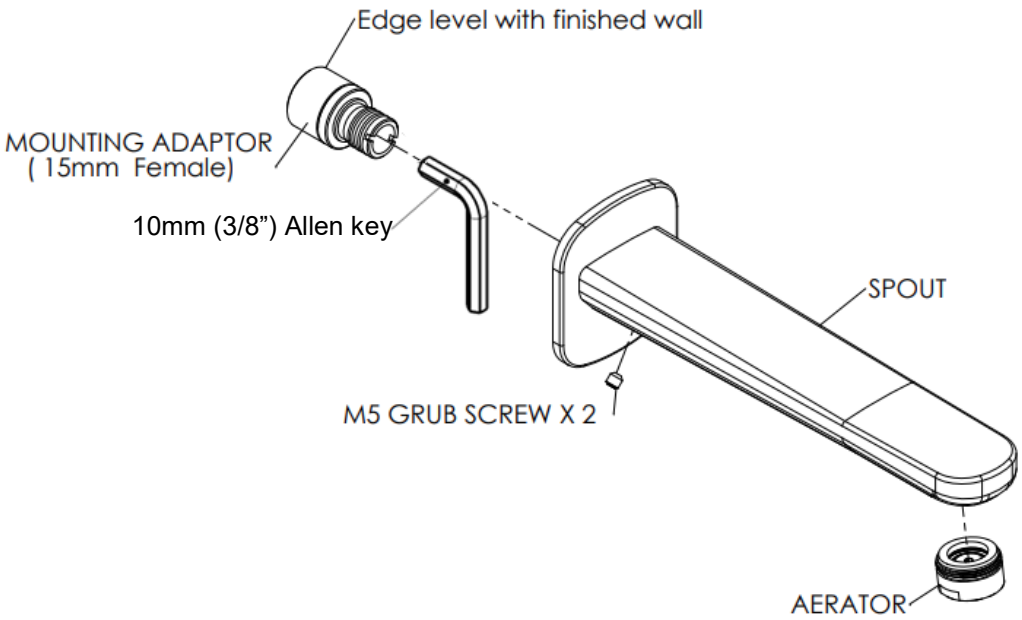

Install a brass 15mm male wingback elbow (not supplied).

1. Note: The female mounting adaptor requires 10mm thread from finished wall.

Install the female mounting adaptor.

1. Remove the 15mm female mounting adaptor by unscrewing the grub screws under the spout until nearly out.
    a. This is to ensure the O-ring on the adaptor is not cut.
2. Cut the inlet thread to 10mm from finished wall.
3. Install using 10mm (3/8”) Allen key.
    a. **Back edge of the adaptor to be level with the finished wall as shown**.

Install spout.

1. Grease the O-ring on adaptor.
2. Remove the protective tape from seal on the flange and position against the wall over adaptor.
3. Install spout to mounting adaptor and tighten the grub screws.
    a. **Check the grub screws are not protruding into the bore**, to ensure the O-ring on the adaptor is not cut.

GREENS

DAVENA WALL MOUNTED BATH SPOUT

INSTALLATION INSTRUCTIONS

PRODUCT #	**BATCH #**

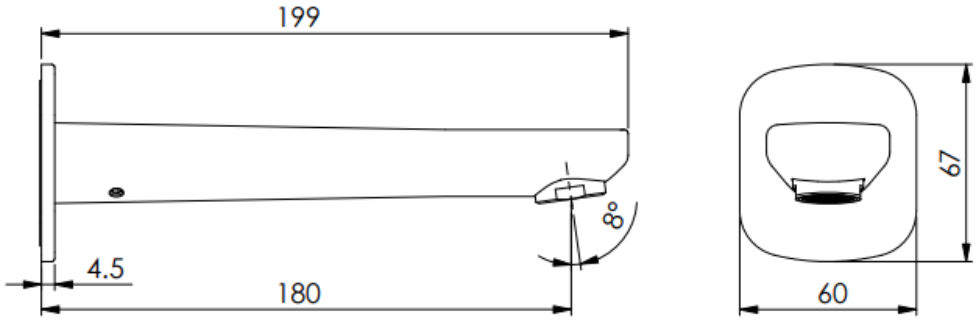

Installation shall be in accordance with the AS/NZS3500 series of standards.

Please leave this instruction sheet with the customer.

For full warranty terms and conditions, please visit www.greenstapware.com/warranty-and-care/

Distributed by: Greens Global AUS PTY LTD
36 Naxos Way, Keysborough VIC 3173
Phone: 1800 244 487 Fax: 1800 244 212
Email: aussales@greenstapware.com
Website: www.greenstapware.com
Service Hotline: 1800 244 992

#42251 12/24