LUSTRO II

Pull-Down Sink Mixer



LF1950254CP | Chrome
LF1950254MB | PVD Matte Black
LF1950254BN | PVD Brushed Nickel
LF1950254BB | PVD Brushed Brass
LF1950254GM | PVD Gunmetal
LF1950254BC | PVD Brushed Copper

WELS: 5 STAR | 6.0 L/min
WELS Registration No.: T35496

- Lead Free Compliant
- Pull-Down Handset
- Dual Function Spray
- European Cartridge
- Swivel Spout

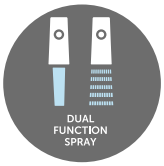

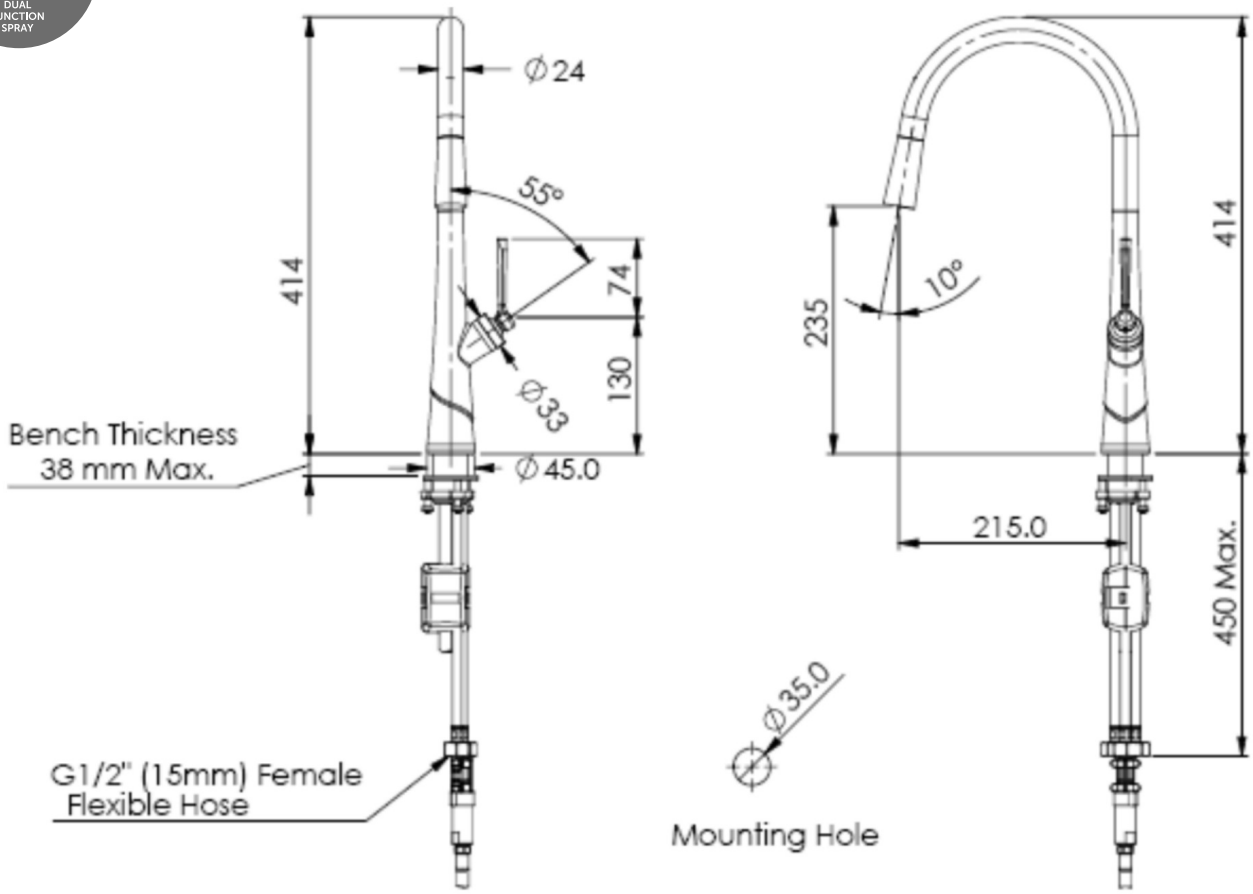

SSG-20260917-5F745E15

AU PHONE 1800 244 487
EMAIL aussales@greenstapware.com
WEBSITE greenstapware.com.au

GREENS
where life meets water