# MACI

## Bath Spout



21201800 | Chrome
21201807 | Matte Black
21201801 | PVD Brushed Nickel
21201806 | PVD Brushed Brass
21201809 | PVD Gunmetal

- Fixed straight spout
- 180mm Reach
- 50mm Wall Flange
- Suits Maci; Mika

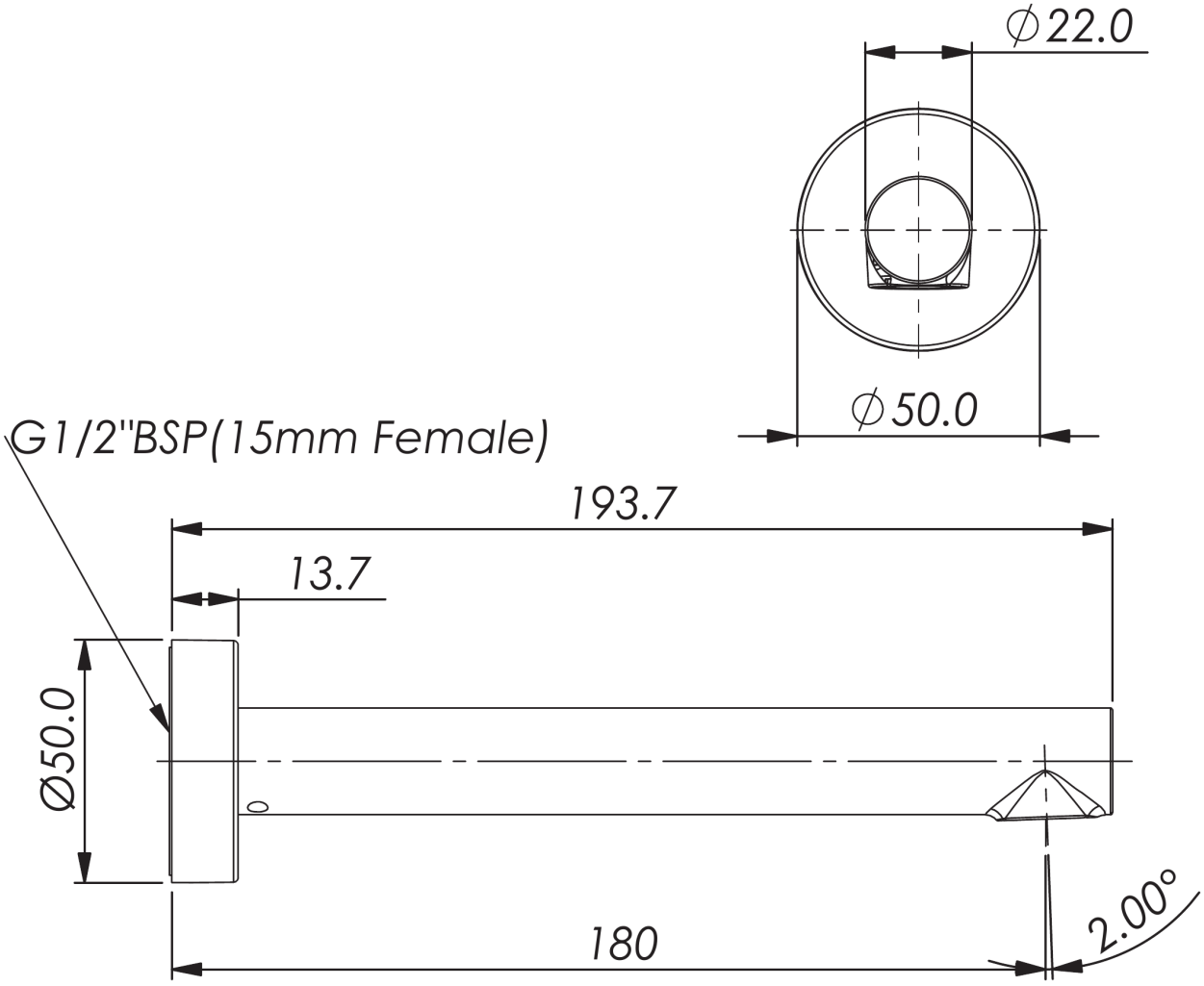


SSG-20260917-A18EF599

**AU** PHONE 1800 244 487
EMAIL aussales@greenstapware.com
WEBSITE greenstapware.com.au

GREENS
where life meets water