MARKETTI BLADE

Basin Mixer (Fixed)



LF161850CP | Chrome

ZERO RATED: WELS 4 STAR | 7.5 L/min
WELS Registration No.: T18346

- Fixed Spout
- Suitable for Gravity Fed
- QL Cartridge Technology

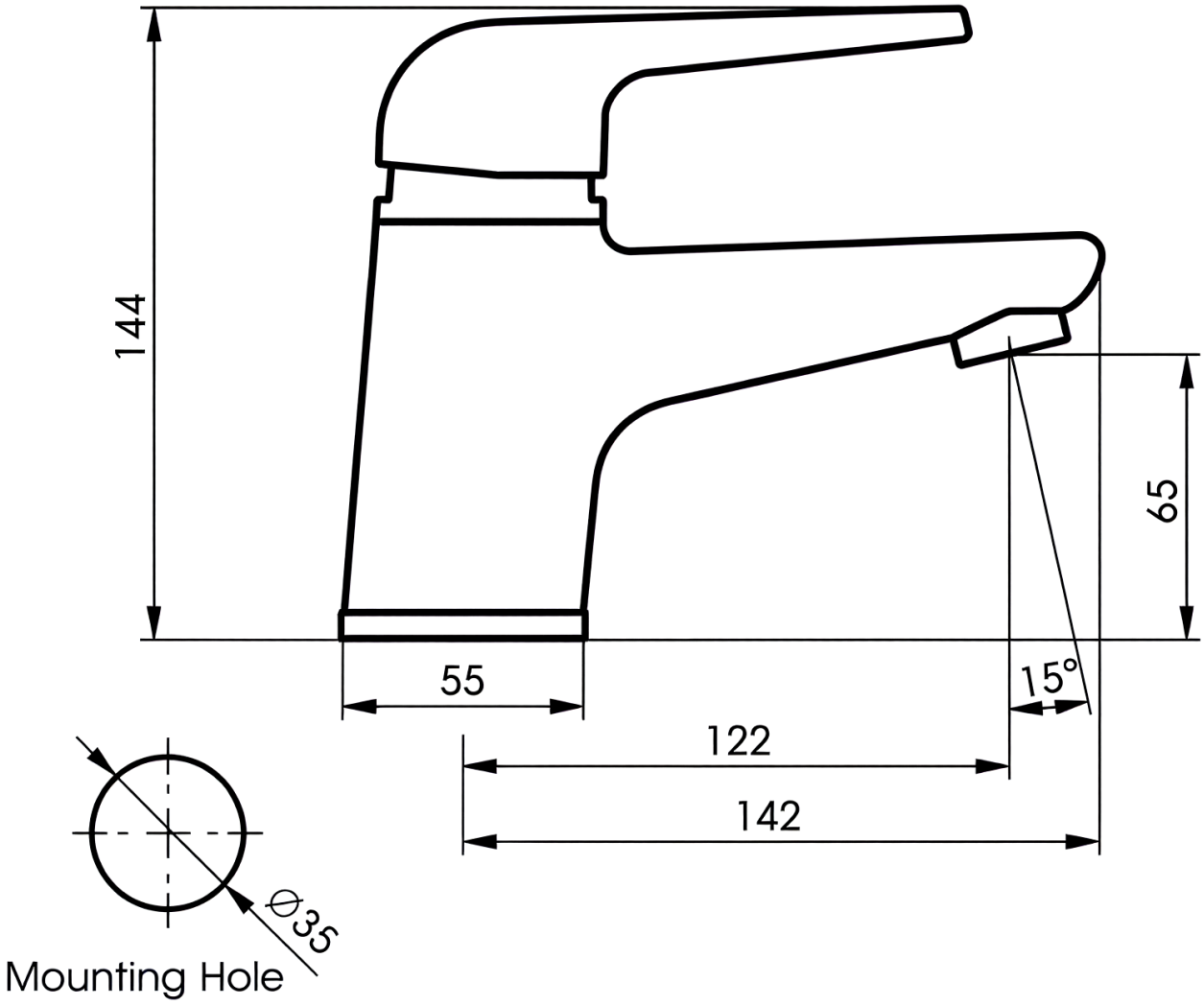

AU PHONE 1800 244 487
EMAIL aussales@greenstapware.com
WEBSITE greenstapware.com.au

GREENS
where life meets water