NOVI

Pull-Down Sink Mixer



LF24203542CP | Chrome
LF24203542MB | PVD Matte Black
LF24203542BN | PVD Brushed Nickel
LF24203542BB | PVD Brushed Brass
LF24203542GM | PVD Gunmetal

WELS: 5 STAR | 6.0 L/min
WELS Registration No.: T42506

- Lead Free Compliant
- Pull-Down Handset
- Dual Function Spray
- European Cartridge

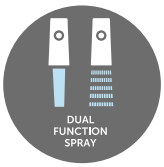

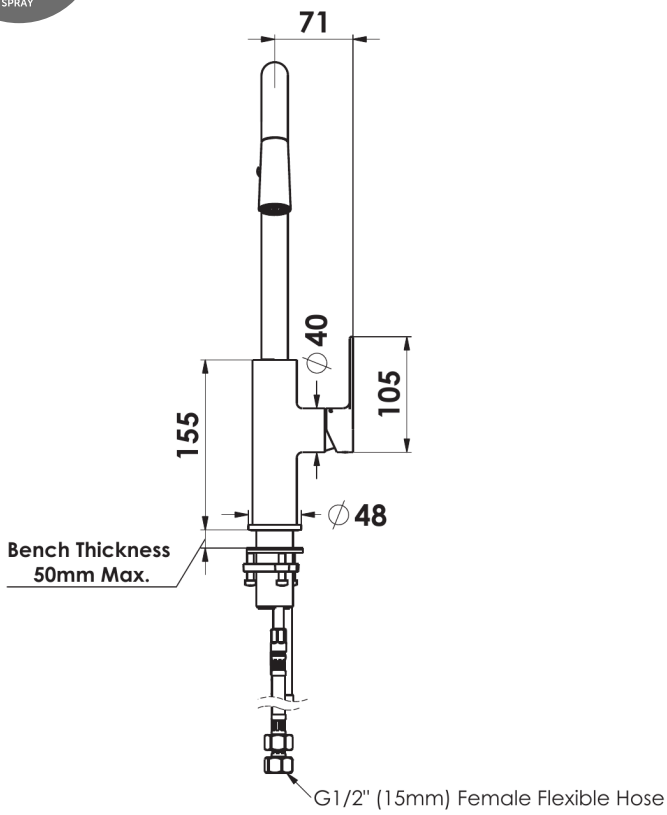

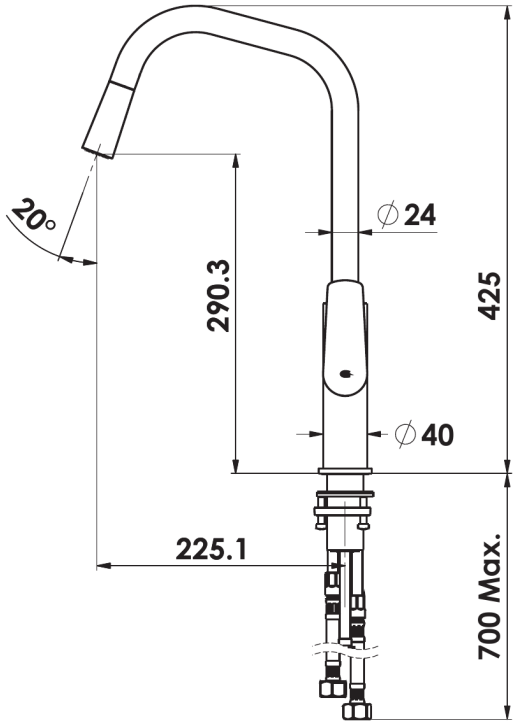



SSG-20260917-CEFAF8CE

AU PHONE 1800 244 487
EMAIL aussales@greenstapware.com
WEBSITE greenstapware.com.au

GREENS
where life meets water