REASON

Towel Holder



18410CP | Chrome
18410MB | PVD Matte Black
18410BN | PVD Brushed Nickel
18410BB | PVD Brushed Brass
18410GM | PVD Gunmetal
18410BC | PVD Brushed Copper

- Brass Pillars
- 218mm Centres
- 35mm Flange

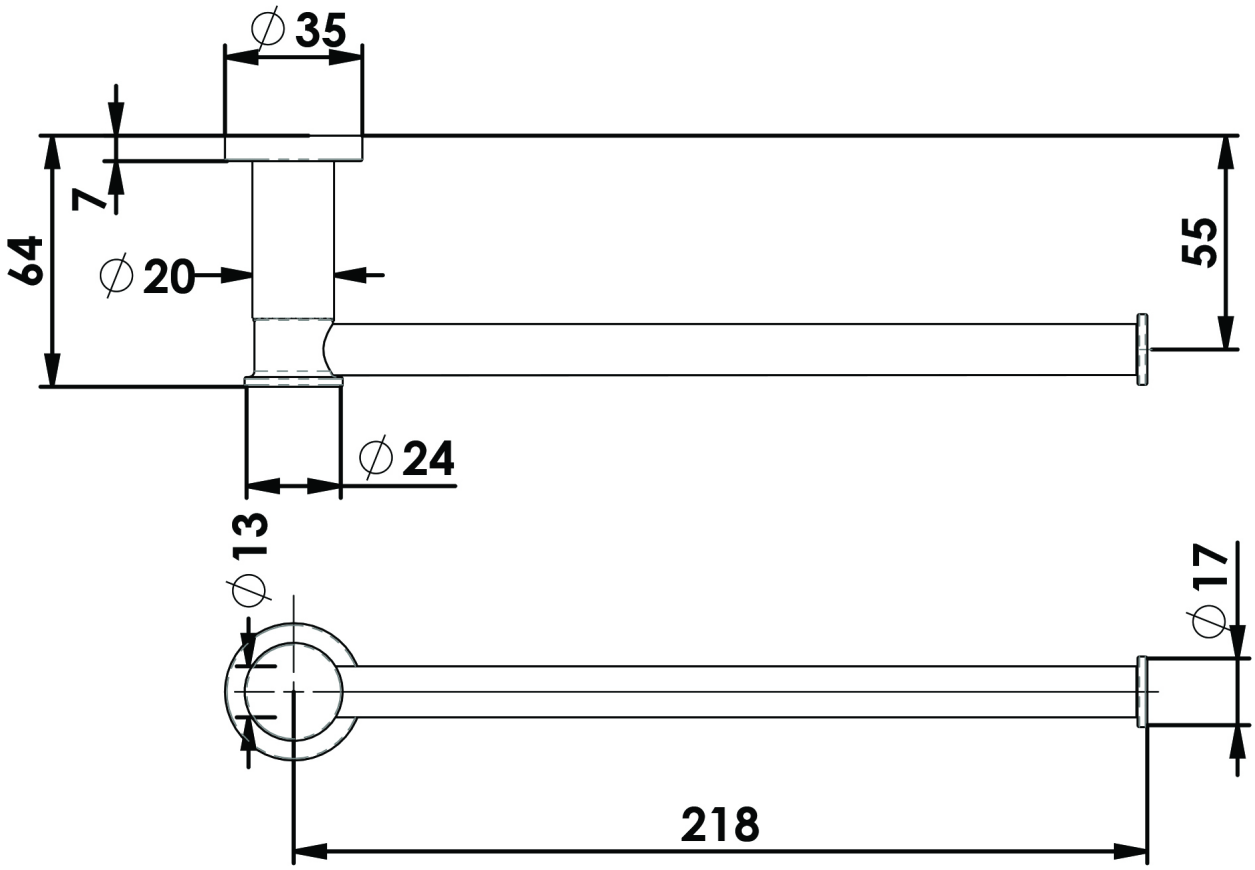

SSG-20260917-04BC5A53

AU PHONE 1800 244 487
EMAIL aussales@greenstapware.com
WEBSITE greenstapware.com.au

GREENS
where life meets water