# REASON

## Single Towel Rail



18413CP | Chrome
18413MB | PVD Matte Black
18413BN | PVD Brushed Nickel
18413BB | PVD Brushed Brass
18413GM | PVD Gunmetal
18413BC | PVD Brushed Copper

- Brass Pillars
- 762mm Rail
- 762mm Rails
- 35mm Flanges

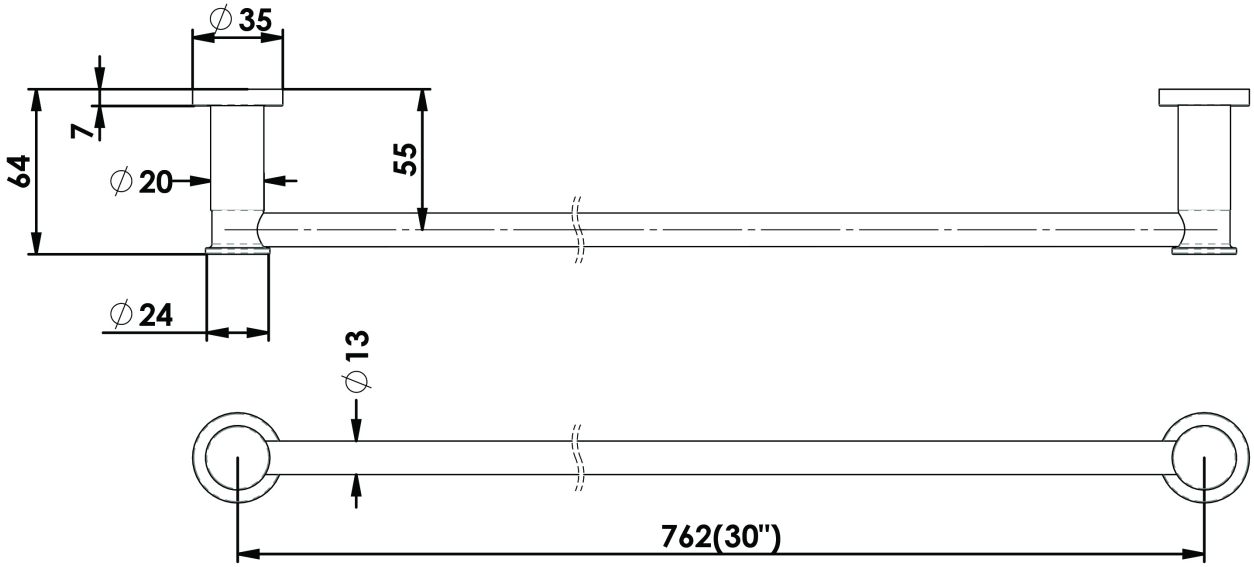




AU PHONE 1800 244 487
EMAIL aussales@greenstapware.com
WEBSITE greenstapware.com.au

GREENS
where life meets water