REFLECT

Hand Towel Holder

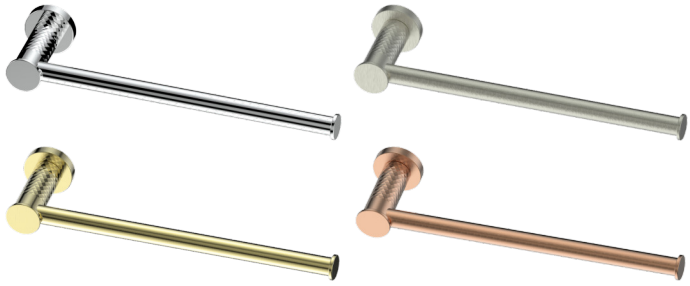

21310CP | Chrome
21310BN | PVD Brushed Nickel
21310BB | PVD Brushed Brass
21310BC | PVD Brushed Copper

- Brass Pillars
- 218mm Centres
- 35mm Flange

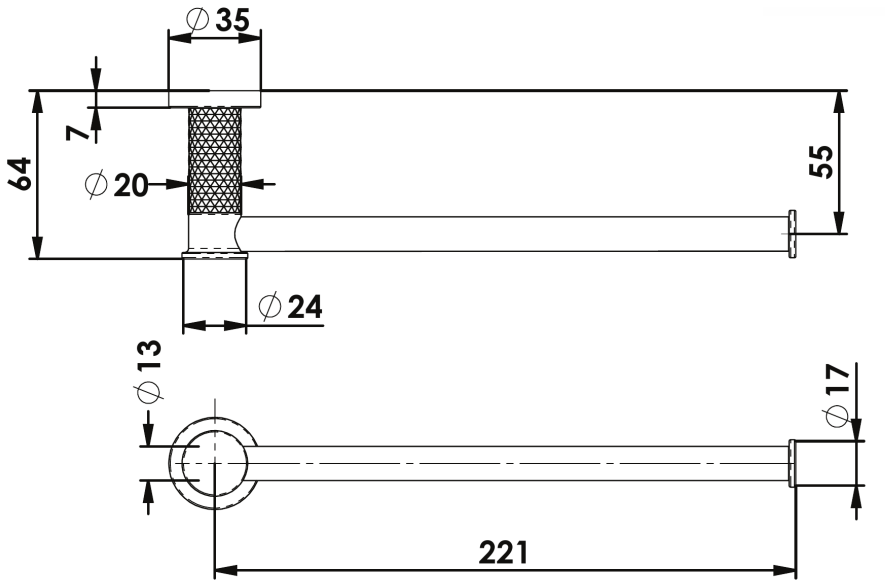

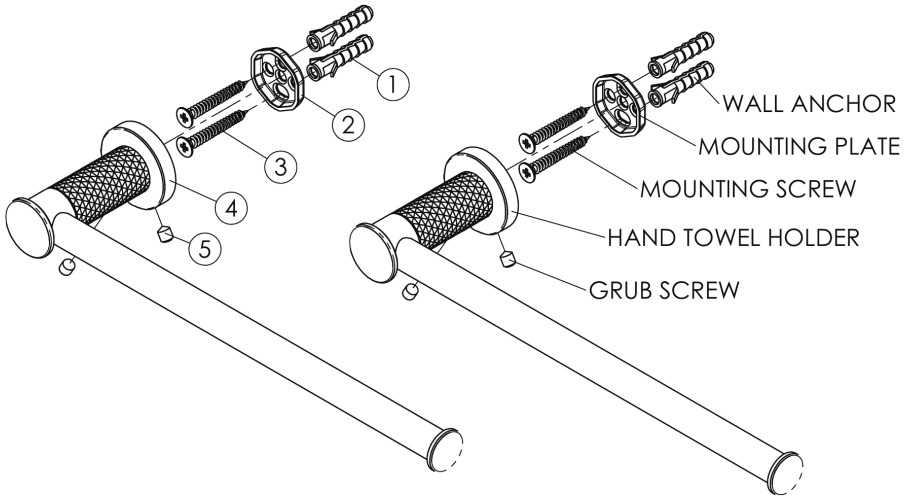

AU PHONE 1800 244 487
EMAIL aussales@greenstapware.com
WEBSITE greenstapware.com.au

GREENS
where life meets water