REGENCY

Pull Out Mixer



LF150570CP | Chrome

WELS: 4 STAR | 7.5 L/min
WELS Registration No.: T14645

- Lead Free Compliant
- Pull-Out Handset
- Dual Function Spray
- Swivel Spout

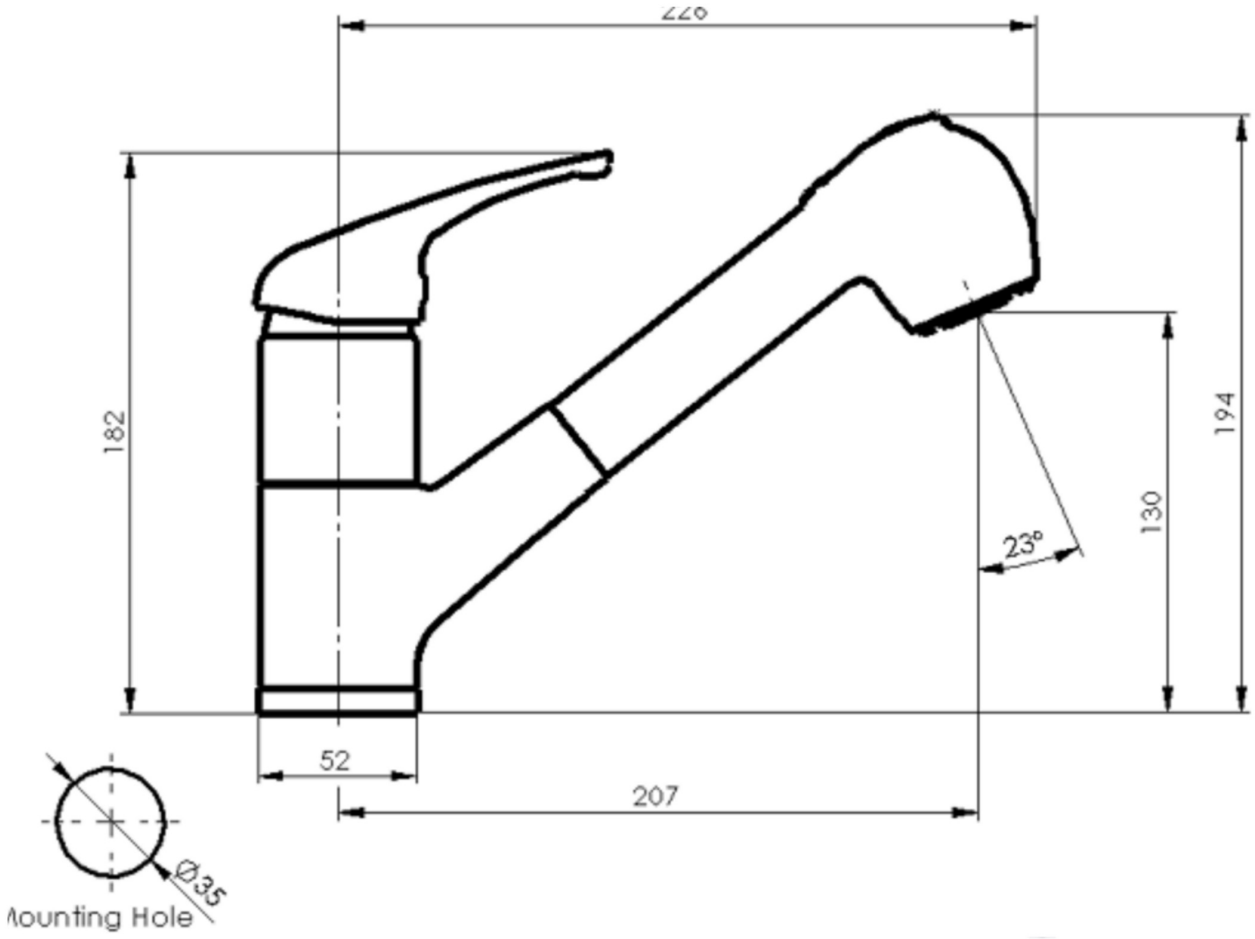

AU PHONE 1800 244 487
EMAIL aussales@greenstapware.com
WEBSITE greenstapware.com.au

GREENS
where life meets water