SWEPT

Shower Mixer



LF1860257CP | Chrome
LF1860257MB | PVD Brushed Nickel
LF1860257BN | PVD Matte Black
LF1860257GM | PVD Gunmetal
LF1860257BC | PVD Brushed Copper

- Lead Free Compliant
- 60mm Soft Square Faceplate

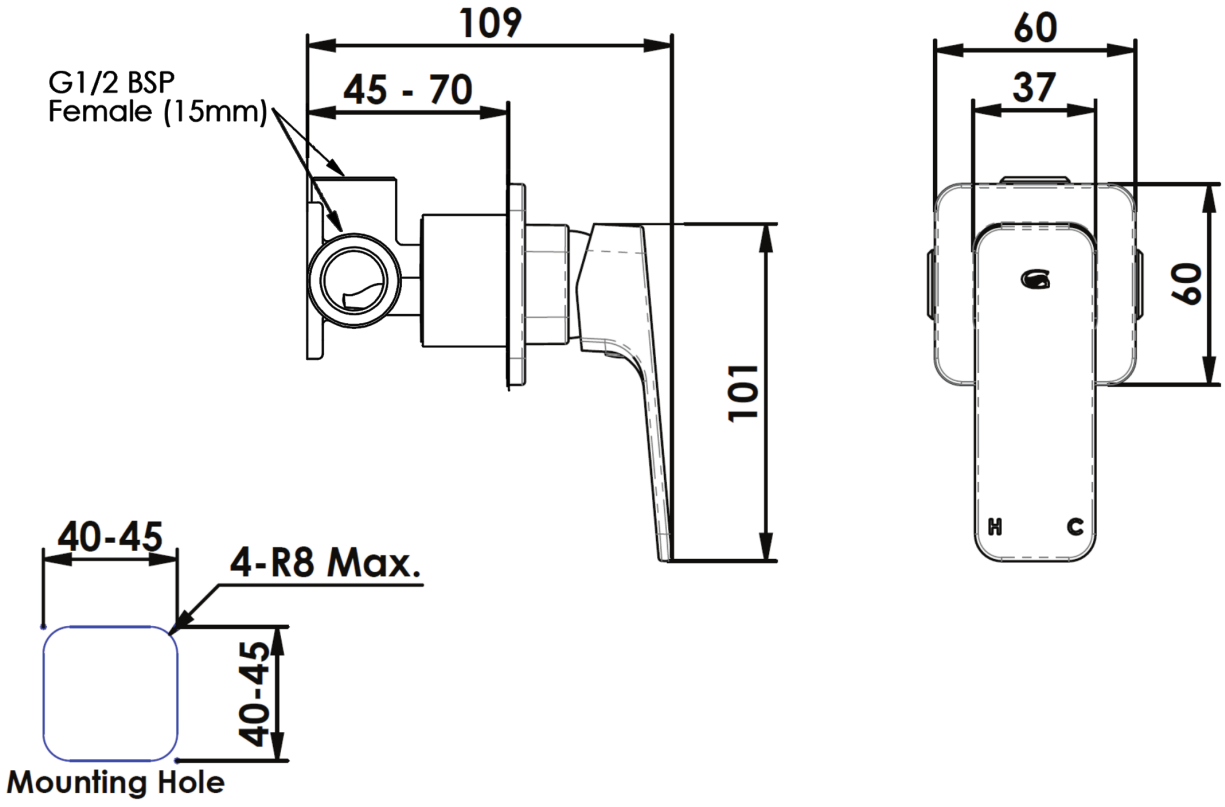

AU PHONE 1800 244 487
EMAIL aussales@greenstapware.com
WEBSITE greenstapware.com.au

GREENS
where life meets water