TEXTURA

Pulldown Sink Mixer



LF1830254MB | PVD Matte Black
LF1830254BN | PVD Brushed NIckel
LF1830254BB | PVD Brushed Brass
LF1830254GM | PVD Gunmetal

WELS: 5 STAR | 5.0 L/min
WELS Registration No.: T34652

- Lead Free Compliant
- Pull-Down Handset
- Dual Function Spray
- European Brass Cartridge
- Diamond Faceted Texture on Handle & Handset

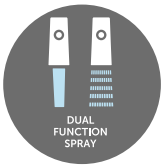

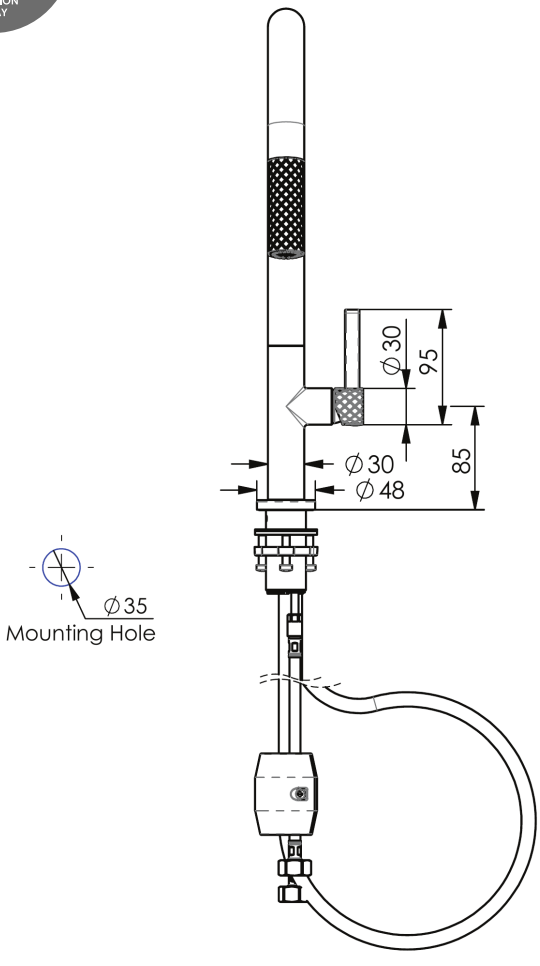

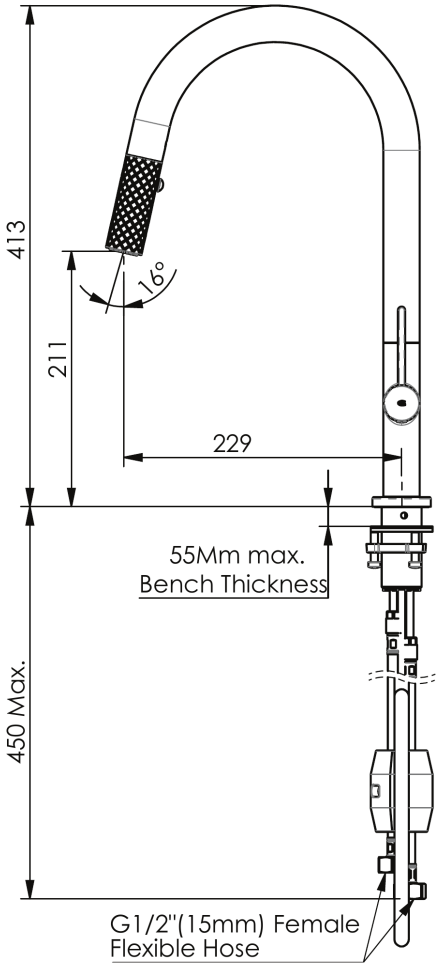

AU PHONE 1800 244 487
EMAIL aussales@greenstapware.com
WEBSITE greenstapware.com.au

GREENS
where life meets water