ZOLA

Robe Hook

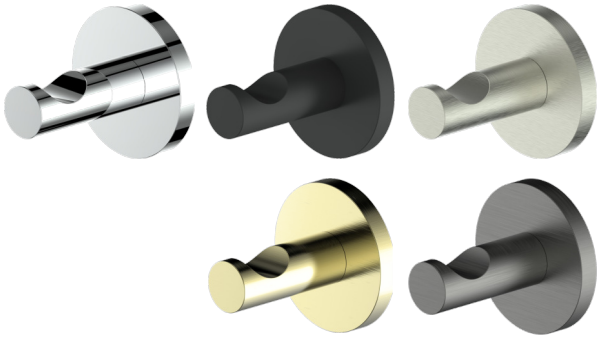

680905CP | Chrome
680905MB | PVD Matte Black
680905BN | PVD Brushed Nickel
680905BB | PVD Brushed Brass
680905GM | PVD Gunmetal

- 50mm Wall Flange



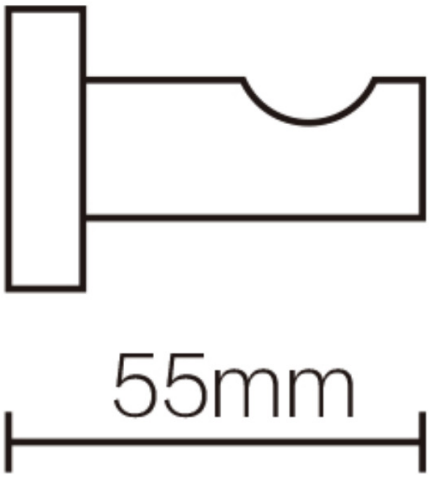

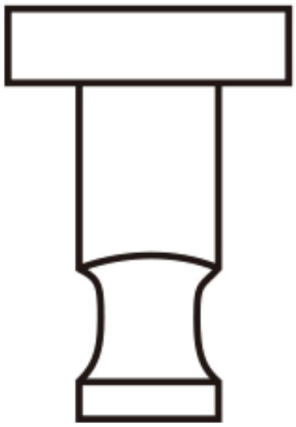

AU PHONE 1800 244 487
EMAIL aussales@greenstapware.com
WEBSITE greenstapware.com.au

GREENS
where life meets water